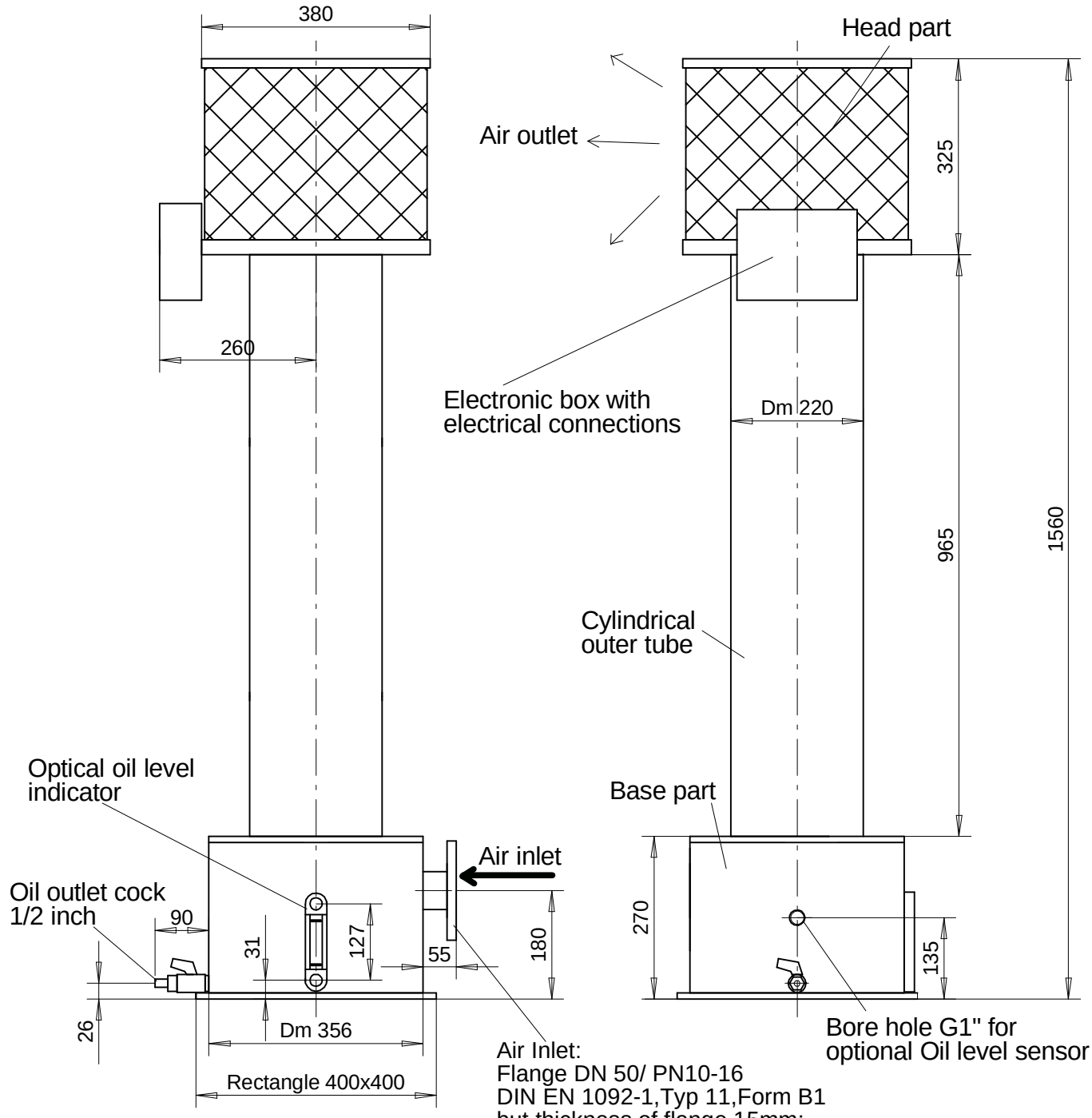

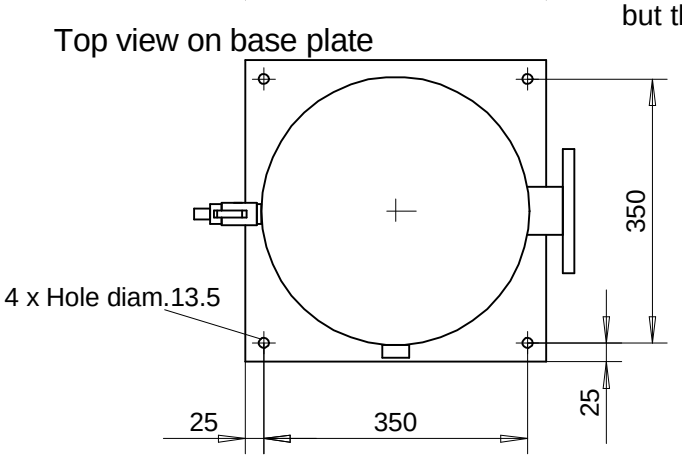

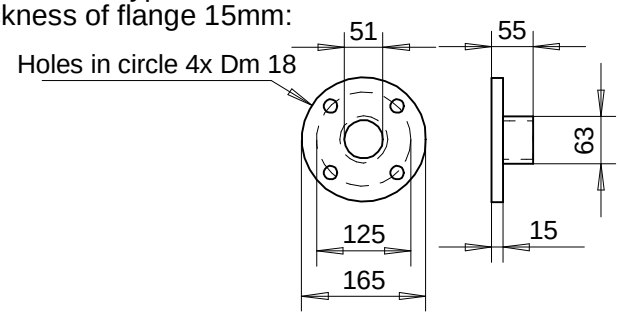

Total weight of device about 25 kg.
Oil collecting capacity: about 10 l

				Datum	Name	Kolb System-technik AG	Copyright: Kolb AG
			Bearb.	19.5.10	Kolb Gernot		
			Gepr.				Blatt 1 von 1
			SmokeX 222 Dimensions Flange DN 50, Oil cock 1/2", 180°				Ref: m222mb9
Änderung	Datum	Name					