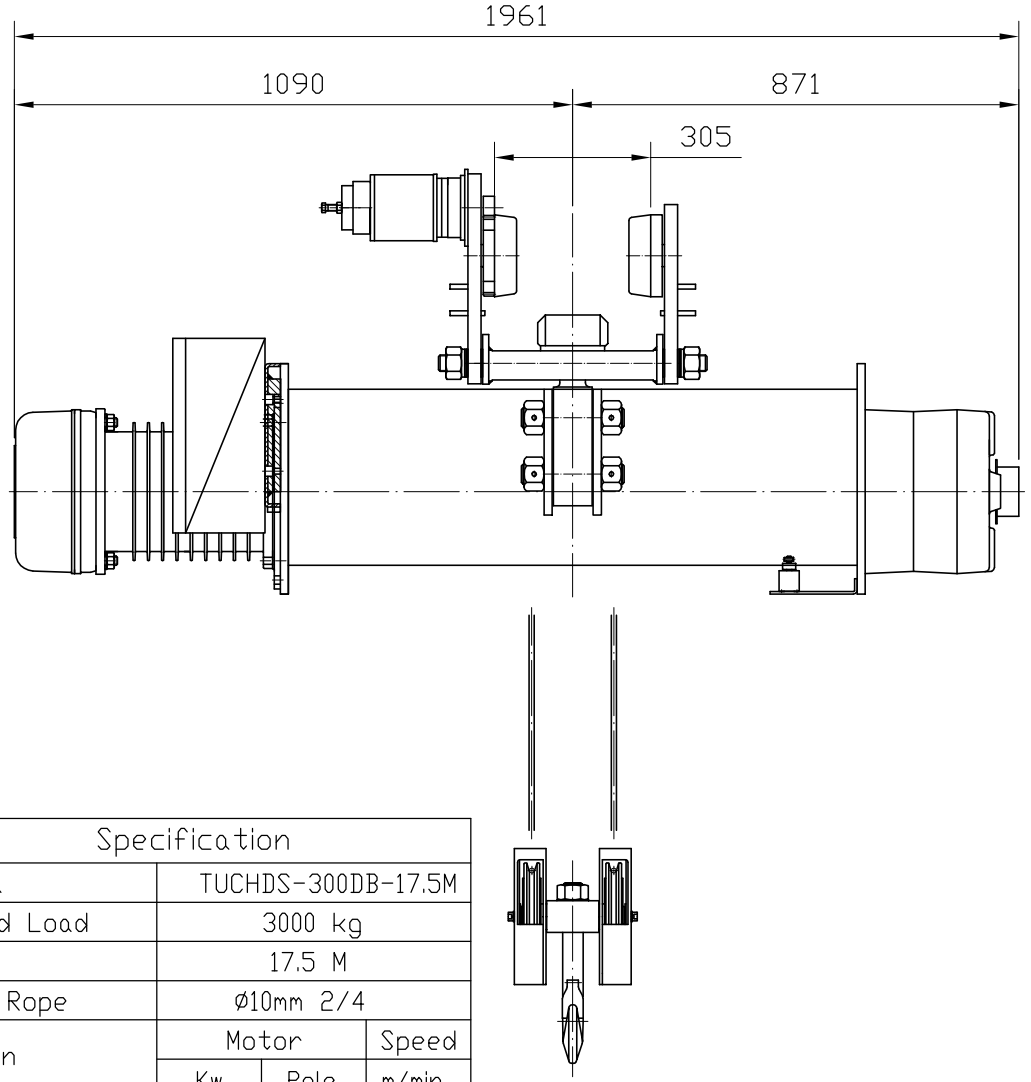

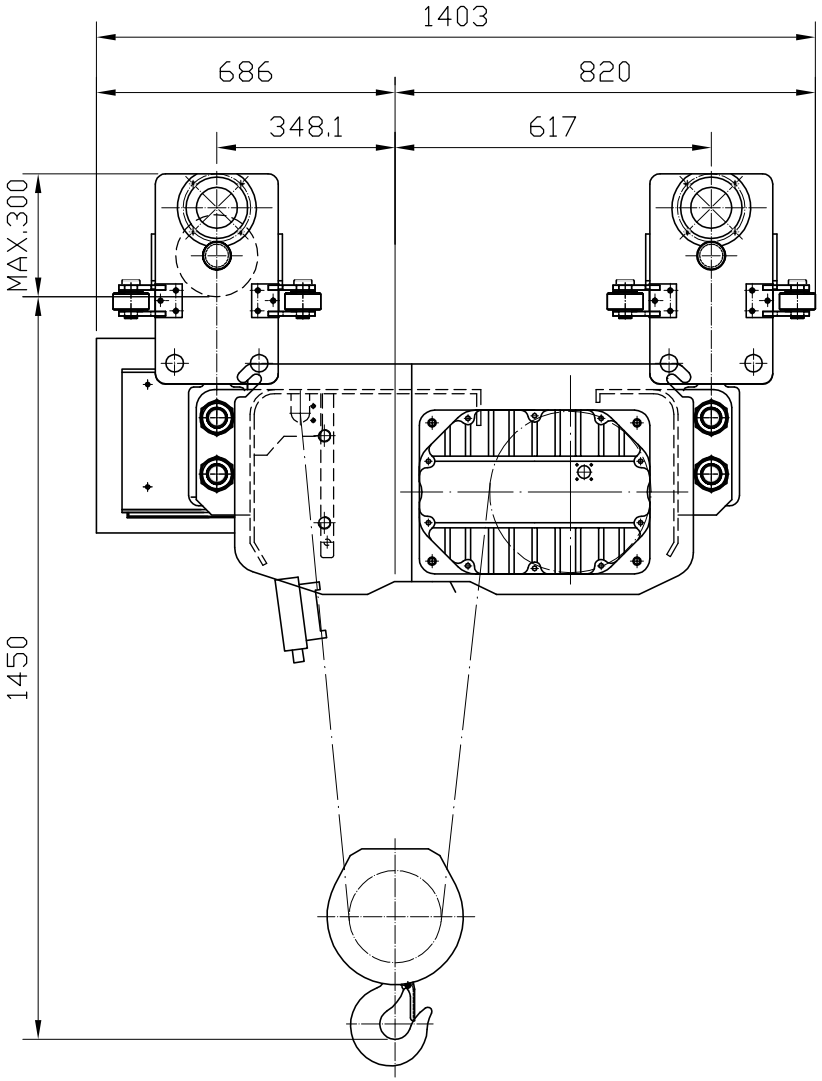

Specification			
Model	TUCHDS-300DB-17.5M		
Rated Load	3000 kg		
Lift	17.5 M		
Wire Rope	ø10mm 2/4		
Motion	Motor		Speed
	Kw	Pole	m/min
Main Hoisting 40/20ED	5/1.7	4/12	8/2.7
Aux. Hoisting			
Traversing 40/20ED	(0.4/0.13)X2	4/12	15/5
Net Weight	Approx. 990 kg		
Power Source	3ø 50HZ 525V-48V		

BEAM WIDTH=300
Curve Radius :1500 mm

ITEM NO.	DESCRIPTION	QTY.	MATERIAL	WEIGHT	PARTS. NO.
–	–	–			

PARTS NO.	–	DWG. NO.	F11001015-03A	DWG. NAME	Hoist Ass. TUCHS-300DB-17.5M

SIGN	CORRECTION	CORRECTOR	DATE							
				DRAWN	horry	SCALE	1:15 A4	HEAT TREAT.	–	ELEPHANT LIFTING EQUIPMENT (PTY) LTD
				DESIGN	W.C.W	ASS. NO.		HARDNESS	–	
				CHECKED	M.H.Lin	DATE	104.04.16			