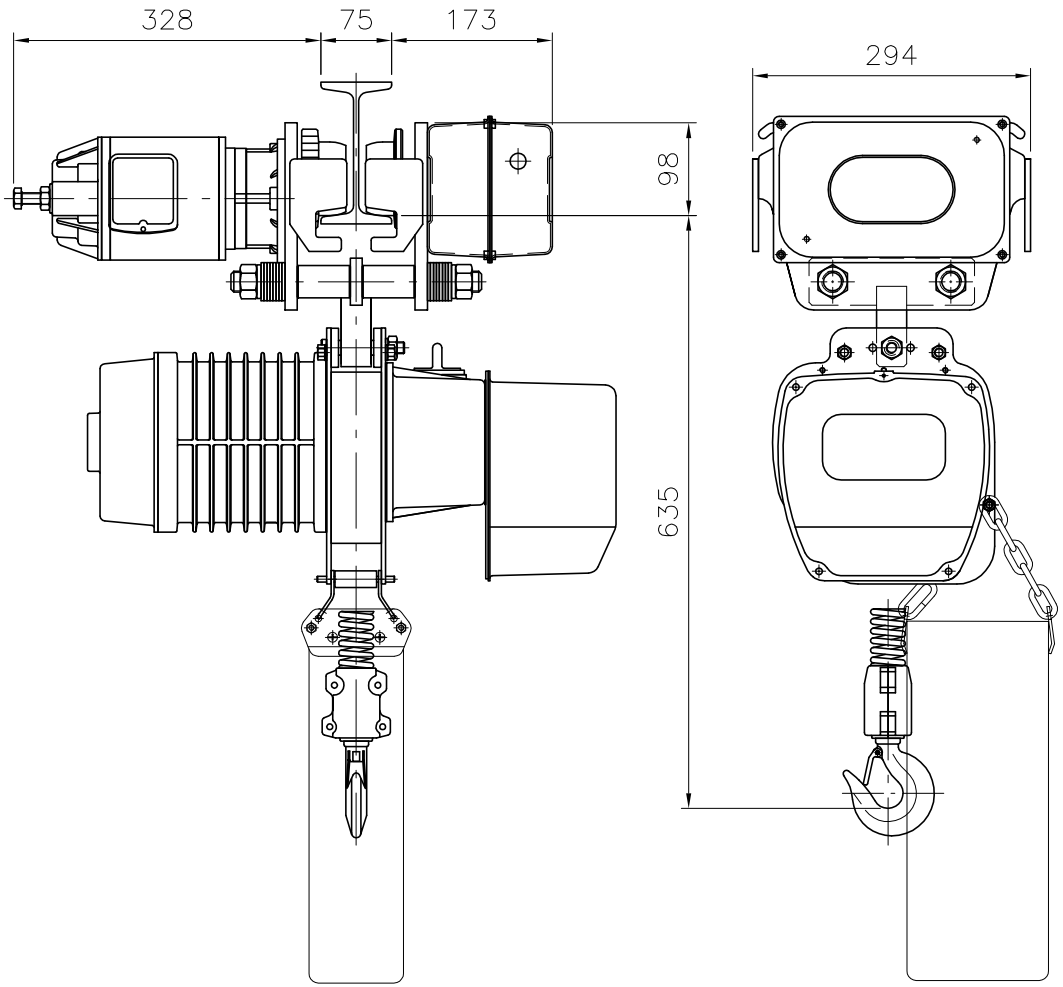

ITEM NO.	DESCRIPTION	QTY.	MATERIAL	WEIGHT	PARTS. NO.
—	—	—	——		——

PARTS NO.	—	DWG. NO.	S-101010	DWG. NAME	Hoist And Trolley Assembled Drawing YSLD-100+MTD-100 (E-TYPE)

				DRAWN	WSS	SCALE	1:8	HEAT TREAT.	—
1	—	—	-	DESIGN	CMH	ASS. NO.		HARDNESS	-
SIGN	CORRECTION	CORRECTOR	DATE	CHECKED	LMS	DATE	2012/02/02		

ELEPHANT LIFTING EQUIPMENT (PTY) LTD