SIGNALINE HEAT

Signaline Heat Sensing Cables

LICO®

# Data Sheets

**LICO Electronics GmbH**
Klederinger Strasse 31
A-2320 Kledering/Wien
Vienna - Austria

Tel: +43 1 706 43 000 Fax: +43 1 706 41 31
email: sales@lico.at

# Signaline Fixed Temperature Heat Sensing Cable

Signaline Fixed Temperature Heat Sensing Cable (Signaline FT) detects a build up of heat anywhere along its length. When any point along the length of the cable reaches a predetermined temperature an alarm is initiated.

Signaline FT is available in four different temperature settings and two outer cover options making the Signaline FT suitable for use in a very wide range of applications.

**Signaline FT Operation**

Signaline FT is comprised of two steel conductors individually insulated with a heat sensitive polymer that are twist-

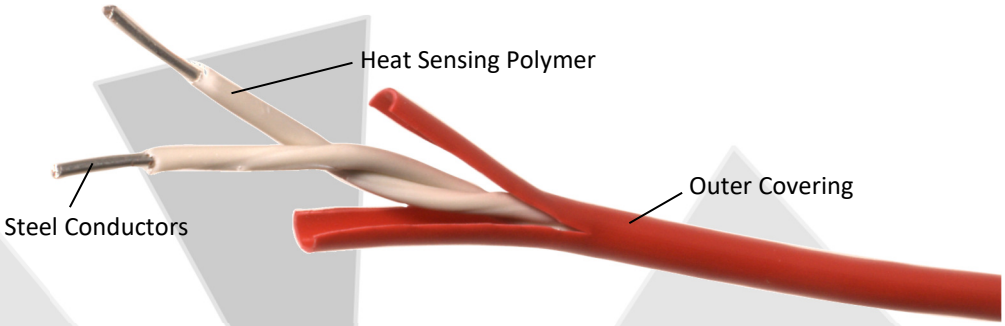


ed together. At the rated temperature the heat sensitive polymer insulation breaks down permitting the steel conductors to move into contact with each other. This forms a closed switch contact that can be used to signal an alarm condition at the control panel.

Signaline FT cable can be installed in hazardous areas when suitably protected by an intrinsically safe barrier.

Please refer to the Signaline application notes available at www.Lgmproducts.com

**LICO Electronics GmbH**
Klederinger Strasse 31
A-2320 Kledering/Wien
Vienna - Austria

Tel: +43 1 706 43 000 Fax: +43 1 706 41 31
email: sales@lico.at

# Signaline Fixed Temperature Heat Sensing Cable

| Part No | AlarmTemp °C/°F | Maximum Ambient | Outer Sheath | Colour | Overall Diameterm m | Approval |
|---|---|---|---|---|---|---|
| **FT-68** | 68/155 | 45/113 | PVC | RED | 3.5 | FM/UL |
| **FT-68-R** | 68/155 | 45/113 | Chemical | BLACK | 4.5 | UL |
| **FT-88** | 88/190 | 70/158 | PVC | WHITE | 3.5 | FM/UL |
| **FT-105** | 105/220 | 85/185 | PVC | WHITE | 3.5 | FM/UL |
| **FT-105-R** | 105/220 | 85/185 | Chemical | BLACK | 4.5 | UL |
| **FT-185-R** | 185/365 | 125/257 | Chemical | RED | 3.6 | UL |

**Common Specification**

| | |
|---|---|
| **Conductor Resistance** | 0.190Ω/m or 0.0579Ω/FT @ 20°C |
| **Max Voltage** | 42Vdc or 30Vac |
| **Dielectric Withstand (UL)** | 500Vdc |
| **Tensile Strength** | 1700 N/mm$^2$ |
| **Minimum Bend Radius** | 75mm |
| **Weight** | 12Kg/500m |
| **Minimum Operating temperature** | -40°C (Minimum bend radius should be doubled when installing the cable below 0°C) |

**Accessories**

A full range of cable fixings, Signaline Universal Connector Boxes, intrinsically safe barriers and zone monitor panels are available. (Please see our website for details)

**Stainless Steel**

The Signaline FT cables can also be supplied with a stainless steel outer braid. Please contact our sales office for details

**Other Signaline Products**

**LICO Electronics GmbH**
Klederinger Strasse 31
A-2320 Kledering/Wien
Vienna - Austria

Tel: +43 1 706 43 000 Fax: +43 1 706 41 31
email: sales@lico.at

# Alarm Point Distance Locator

The APDL is an Alarm Point Distance Locating device exclusively for use with Signaline Heat Sensing Cables. The APDL is designed to interface between a listed fire alarm releasing or control panel or addressable module and a single length of Signaline Heat Sensing Cable. An important design feature of the APDL is the continued correct operation of the fire alarm control/releasing panel or addressable module regardless of faults which may occur in the APDL such as loss of power to the unit. APDL complies with the relevant FM standard and is enclosed in an IP65 rated enclosure.

**Features**

- Alarm point distance locating device for use with Signaline Heat Sensing Cables:

  Signaline FT-68

  Signaline FT-68-R

  Signaline FT-88

  Signaline FT-88-R

  Signaline FT-105

  Signaline FT-105-R

  Signaline FT-185-R
- Alternating metres/feet display of alarm point
- Cable selection
- Leader cable calibration
- Detection of alarm point from 100m to 3000m (300ft to 10000ft)
- Installation settings saved in event of power loss
- IP65 rated enclosure for indoor/outdoor use with smooth sides or 4 sizes of M knock -outs

FM APPROVED

**LICO Electronics GmbH**
Klederinger Strasse 31
A-2320 Kledering/Wien
Vienna - Austria

Tel: +43 1 706 43 000 Fax: +43 1 706 41 31
email: sales@lico.at

# Alarm Point Distance Locator

**Enclosure**

| | |
|---|---|
| Dimensions | W180mm x H130mm x D78mm |
| Rating | IP65 |
| Finish | Polycarbonate with hinged removable cover and removable internal front plate. Light grey with smoked grey cover. |
| Approvals | FM Class 3210 |

**Enclosure Knockout Sizes**

| | |
|---|---|
| Long Side | M25 (25mm) & M16 (16mm) |
| Short Side | M32 (32mm) & M20 (20mm) |

**Power Requirements**

| | |
|---|---|
| Operating voltage | 9-28VDC |
| Normal Operation | <10mA (LCD back-light off) |
| Alarm Locating | <90mA (LCD back-Light on) |

Power supply transient protection 1500W for 1ms

**Operating Temperature** 0-49°C (32°F-120°F)

| | | |
|---|---|---|
| **Accuracy** | 15°C-25°C (59°F-77°F) | <±5% of alarm point distance |
| | 0°C-49°C (32°F-120°F) | <±6.5% of alarm point distance |

**Terminal Blocks**

**LICO Electronics GmbH**
Klederinger Strasse 31
A-2320 Kledering/Wien
Vienna - Austria

Tel: +43 1 706 43 000 Fax: +43 1 706 41 31
email: sales@lico.at

# Signaline HD Heat Sensing Cable System

The Signaline HD Heat Sensing Cable System (Signaline HD System) is a cost efficient and highly effective heat detection system designed to be used in commercial and industrial fire detection systems. The Signaline HD System is ideal in applications where traditional heat detectors are impractical, where large coverage is required or where false alarms are likely to occur. It is easy to install and commission, and there are no lengthy or complex calibration and set up procedures.

Signaline HD is an analogue heat sensing cable that monitors significant increases in temperature. Whereas fixed temperature cables provide a simple alarm at a pre-determined temperature, Signaline HD senses significant increases in temperature. An electronic controller connected to the cable monitors the condition of the cable to sense any change in temperature. If the change in temperature is sufficient the controller recognises the change in resistance and creates an alarm.

Signaline HD cable can be repeatedly tested during regular routine fire alarm tests. Signaline HD Cable will reset itself after an alarm when the cable has cooled down unless it has been permanently damaged or destroyed by fire.

The Signaline HD System comprises of two components: the Signaline HD Cable and the Signaline HD  Controller.

**Signaline HD**

The cable is available in three options:

- Standard PVC coating for everyday applications.
- Nylon coating for increased UV protection and chemical resistance against atmospheric gasses and other harmful agents.

**LICO Electronics GmbH**
Klederinger Strasse 31
A-2320 Kledering/Wien
Vienna - Austria

Tel: +43 1 706 43 000 Fax: +43 1 706 41 31
email: sales@lico.at

# Signaline HD Heat Sensing Cable System

**Signaline HD Controllers**

The Signaline HD Controllers (Signaline SKM Controllers) and corresponding End of Line Units are designed to monitor the resistance in the cable. This is done by continually measuring the electrical resistance in the cable between the metallic core and outer braiding.

There are two models designed for conventional systems and a third designed for use on Apollo XP95 addressable systems.

All the controllers are self setting, this avoids any lengthy setting up and calibration process. The controller will react to any significant increase in temperature by detecting the associated change in the cable's resistance.

The End of Line Units provide circuit continuity enabling the controllers to monitor the cable for open and short circuit fault conditions.

**Signaline SKM-03**

The Signaline SKM-03 Controller will provide a standard class C response in accordance with EN54 Part 5 and is VdS approved (certificate no. G203076) The system can be used with any conventional fire detection installations. An alarm is raised when there has been a significant rise in the average temperature which is detected by a drop in the resistance in the cable. The controller will detect either a localised hot spot or a lower level of temperature increase over the entire length. The controller requires a 24 Vdc supply and has volt free fire and fault relay output contacts.

**Signaline SKM-95**

The Signaline SKM-95 Controller is a loop powered Apollo XP95 compatible addressable controller. It gives exactly the same response as the Signaline SKM-03. The controller will provide an XP95 compatible fire control panel an address which will identify the length of cable attached to the controller. Like all Signaline SKM controllers no lengthy calibration or programming is required, simply set the address code via DIL switches in the controller. The controller is also VdS approved (certificate no. G202077).

**LICO Electronics GmbH**
Klederinger Strasse 31
A-2320 Kledering/Wien
Vienna - Austria

Tel: +43 1 706 43 000 Fax: +43 1 706 41 31
email: sales@lico.at

# Signaline HD Heat Sensing Cable

Signaline HD Heat Sensing Cable (Signaline HD) monitors significant increases in temperature. An electronic controller connected to the cable monitors the condition of the cable to sense any change in temperature by continually measuring the electrical resistance between the metallic core and screen. If the change in temperature is sufficient the controller creates an alarm. The controller is easily adjusted for the length of cable being used. Most importantly analogue heat sensing cable is resettable.

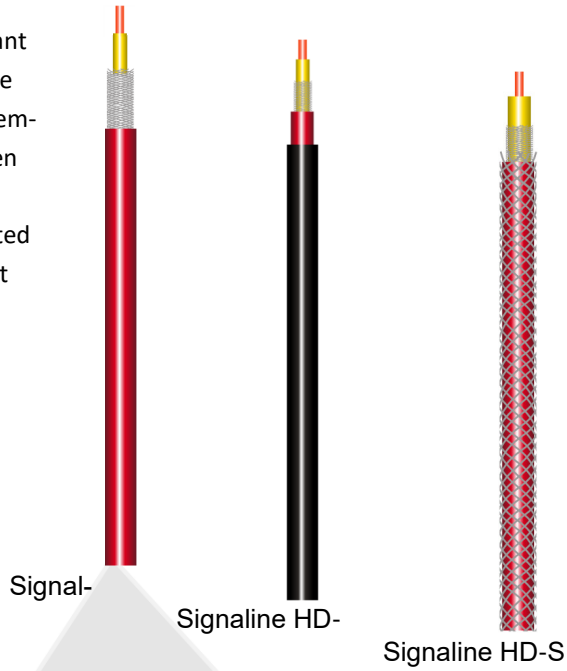


## Signaline HD Specification

| Cable Types | Signaline HD | Signaline HD-R | Signaline HD-S |
|---|---|---|---|
| Outer cover | Red colour PVC | Red colour PVC + chemically resistant black nylon coating | Red colour PVC + stainless steel braid |
| Minimum Bend Radius | 5mm | 18mm | 20mm |
| Weight | 1.6Kg /100 metres. | 2.2Kg /100 metres. | 3.0 Kg /100 metres. |

**Common Specification**

| | | | |
|---|---|---|---|
| Co axial Construction: | Inner Core | - | Copper coated steel |
| | Insulation | - | Heat sensitive polymer |
| | Braid | - | Tinned copper wire |
| | Standard Outer sheath | - | Red P.V.C. |
| Tensile Strength: | Greater than 200N | | |

**LICO Electronics GmbH**
Klederinger Strasse 31
A-2320 Kledering/Wien
Vienna - Austria

Tel: +43 1 706 43 000 Fax: +43 1 706 41 31
email: sales@lico.at

# Signaline HD Heat Sensing Cable

A Signaline SKM Controller integrates the total resistance in the Signaline HD Cable. The resistance will drop as the temperature increases due to either a localised hot spot from a flaming fire or an overall rise in temperature due to a slowly developing fire. The overall response is that of an EN54 pt5 class C heat detector.

Where the cable is installed in high ambient temperatures, the resistance of the cable is reduced. When a long length of cable is installed in a high ambient temperature, the total cable resistance decreases and approaches the

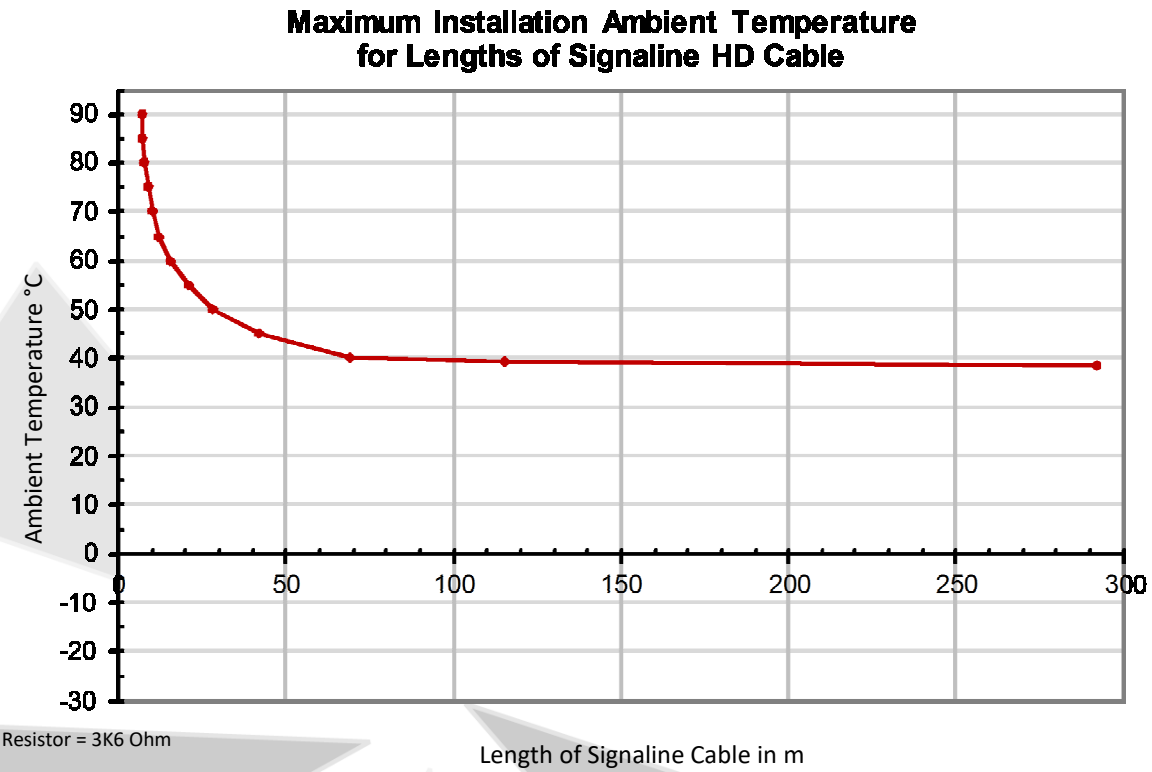


alarm threshold. This effect can be expressed as per the following graph below.

The graph above shows the maximum ambient temperature in which a given length of Signaline HD Cable may be installed without generating a false alarm.


**LICO Electronics GmbH**
Klederinger Strasse 31
A-2320 Kledering/Wien
Vienna - Austria

Tel: +43 1 706 43 000 Fax: +43 1 706 41 31
email: sales@lico.at

# Signaline SKM Heat Sensing Cable Controller

All Signaline HD Heat Sensing Cables (Signaline HD) must be used with a Signaline SKM Controller. Signaline SKM Controllers are very simple and easy to use and there are three models to choose from:

- Signaline SKM-03; EN54 compliant for use with conventional systems (VdS approved)
- Signaline SKM-03UK; generate alarm when 1m of cable reaches 60°C or 80°C
- Signaline SKM-95; EN54 compliant loop power controller for use with Apollo XP95 addressable systems (VdS approved)

**Key Features**

- Easy and economical to install
- Very simple to set up and operate

Signaline SKM Controller

End of Line Unit

- Controller will monitor up to 300m of sensor cable (dependant on ambient temperature).
- The sensor cable is resistant to corrosion & moisture
- Signaline SKM-03 and Signaline SKM-95 are VdS approved
- Cable and controller is self resetting after alarm to facilitate live routine testing of the alarm system
- Will raise an alarm when 1m of Signaline HD reaches 60°C or 80°C (Signaline SKM-03UK only)

**How Does It Work?**

The Signaline SKM Controller provides early warning of an impending fire by detecting overheating in cable ducts, road tunnels, escalators, car parks, lift shafts, conveyer belts and similar difficult to monitor environments. The

**LICO Electronics GmbH**
Klederinger Strasse 31
A-2320 Kledering/Wien
Vienna - Austria

Tel: +43 1 706 43 000 Fax: +43 1 706 41 31
email: sales@lico.at

# Signaline SKM Heat Sensing Cable Controller

| | Signaline SKM-03 | Signaline SKM-03UK | Signaline SKM-95 |
|---|---|---|---|
| Supply Voltage | 24 Vdc | 24 Vdc | Loop powered |
| Idle Current | 28mA | 28mA | <2mA |
| Alarm Current | 58mA | 58mA | 3.2mA |
| Isolator Voltage | N/A | N/A | <14 V |
| Address Protocol | N/A | N/A | XP95 Series |
| Response | EN54 compliant | Alarm raised when 1m of cable is heated to 60°C | EN54 compliant |
| Fire Relay Contact | N/C-C-N/O Relay contact | N/C-C-N/O Relay contact | N/A |
| Fault Relay Contact | N/C-C-N/C Relay contact | N/C-C-N/C Relay contact | N/A |
| Dimensions (WxHxL) | 110/110/65mm | 110/110/65mm | 110/110/65mm |
| Weight | 270g | 270g | 270g |
| System Healthy LED Indicator | Green | Green | No indication |
| Fire LED Indicator | Red | Red | Red |
| Fault LED Indicator | No indication | No indication | Yellow |
| Colour of Housing | Grey, RAL 9002 | Grey, RAL 9002 | Grey, RAL 9002 |
| IP Rating | IP65 | IP65 | IP65 |

**Signaline SKM Controller**

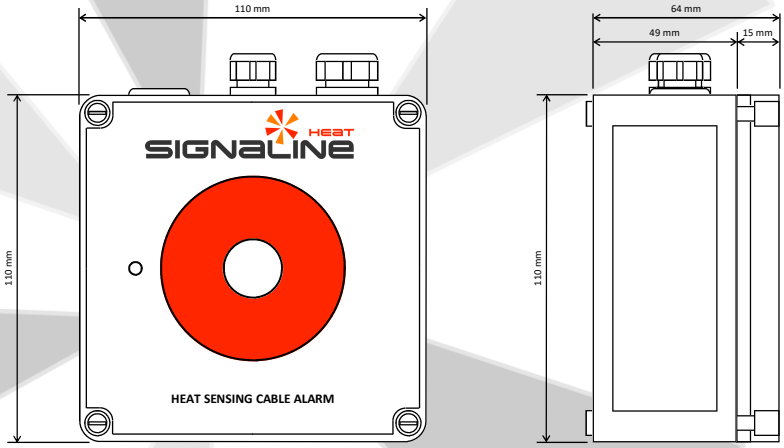


**Signaline End of Line Unit**

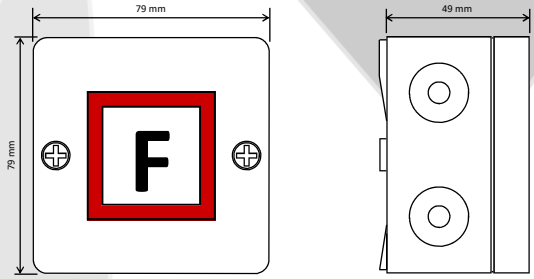



**LICO Electronics GmbH**
Klederinger Strasse 31
A-2320 Kledering/Wien
Vienna - Austria

Tel: +43 1 706 43 000 Fax: +43 1 706 41 31
email: sales@lico.at

# Signaline Auto Cable Collector

Signaline Heat Sensing Cable is frequently installed around the rim of a floating roof tank. Maintaining an electrical connection between the heat sensing cable on the tank roof and the top of the tank can be a problem due to the rise and fall of the floating roof.

When the tank is full, the cable is stowed within the Signaline Auto Collector. The Auto Collector automatically unreels the connecting cable as the roof level falls and re-reels the cable into the collector as the roof rises. It is a mechanical device and does not require a power supply.

The cable is held at an optimised tension to prevent it flapping in high winds.

The mechanism is enclosed within a stainless steel (AISI 304) cabinet. The connecting cable has good resistance to chemical agents and high temperatures.

The unit can be installed both in a vertical or horizontal position by means of fixing holes located on both sides. A removable rain shield has a rubber seal surrounding the cable inlet to obtain a protection degree of IP42. Ingress of water will not harm the mechanism, the cable is terminated within an IP65 junction box mounted on the side of the auto collector

A removable plate allows for the inspection of the spring mechanism and maintenance without the need to remove the unit.

**Specification:**

| | |
|---|---|
| Dimensions | 400 x 400 x 150 mm (H x W X D) |
| Weight | 25kgs |
| Collector Box | Stainless Steel AISI 304 |
| Internal Spring | Carbon Steel |

**LICO Electronics GmbH**
Klederinger Strasse 31
A-2320 Kledering/Wien
Vienna - Austria

Tel: +43 1 706 43 000 Fax: +43 1 706 41 31
email: sales@lico.at

# Signaline Auto Cable Collector

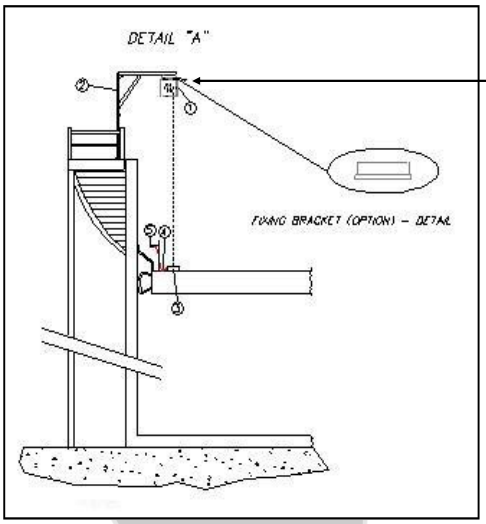

The Signaline Auto Cable Collector is fixed above the floating roof tank with he cable retracting from the bottom. This allows the cable to stretch and retract as the tank raises and lowers. Above shows the fixings of the cable collector. Below is a diagram outlining the system.

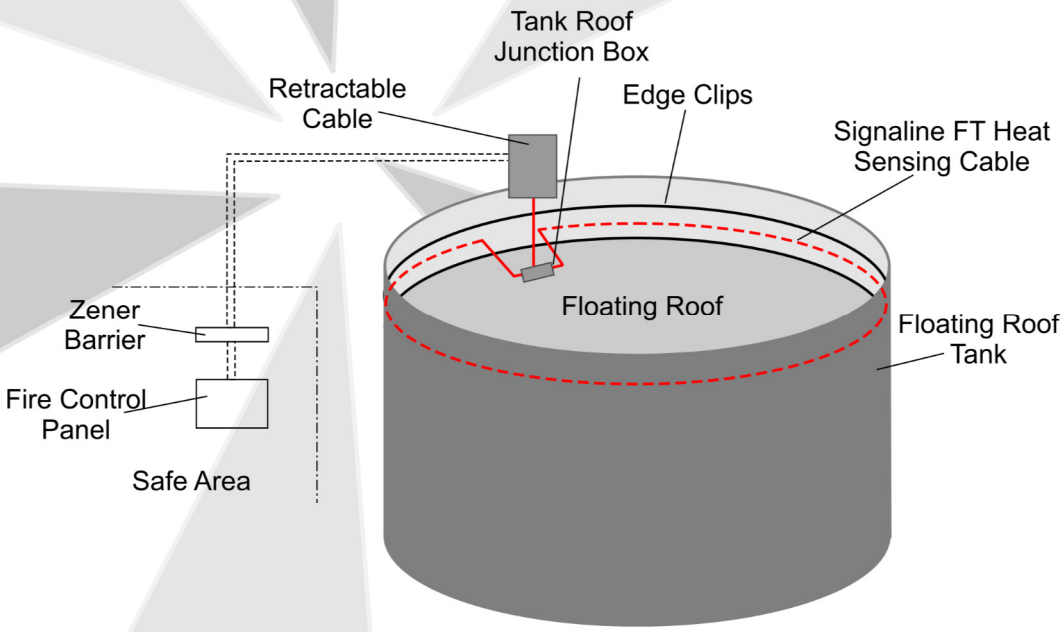


**LICO Electronics GmbH**
Klederinger Strasse 31
A-2320 Kledering/Wien
Vienna - Austria

Tel: +43 1 706 43 000 Fax: +43 1 706 41 31
email: sales@lico.at

# Signaline RC Retractable Cable

Signaline RC Retractable Cables are manufactured specifically for floating roof petro-chemical storage tanks. The floating roof rises and falls as the tank fills and empties. To allow for this movement, a retractable cable is used to connect the Signaline Heat Sensing Cable fitted around the circumference of the floating roof with a Signaline Universal Connector Box at the top of the tank. As the roof drops lower, the spring like cable extends and as the roof

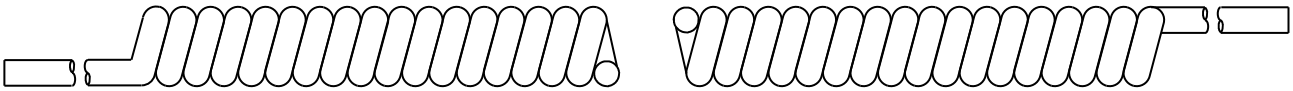

| Signaline RC Retractable Cable Specification | | Standard Example |
|---|---|---|
| **Cable Voltage** | 12 – 24 Vdc | |
| **Outer Sheath Material** | Hytrel | |
| **No of Cores** | 4 | |
| **Conductor Size** | 0.75mm$^2$ | |
| **Extended Length** | A | 20m |
| **Axial Short end tail** | B & C | 1.5m |
| **Coil Diameter** | D | 200mm |
| **Cable Diameter** | E | 10mm |
| **Operating Temperature** | - 40°C to +80°C | |

Signaline RC Retractable Cables are custom made to order to accommodate different tank sizes and designs

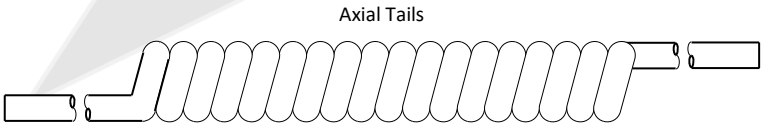


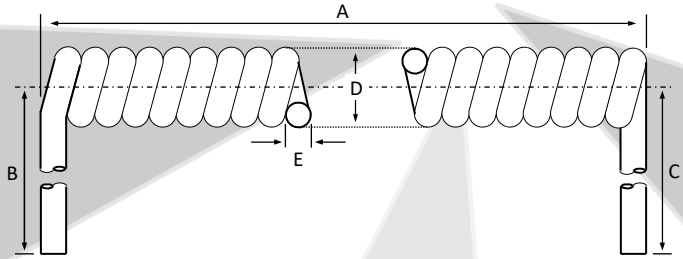


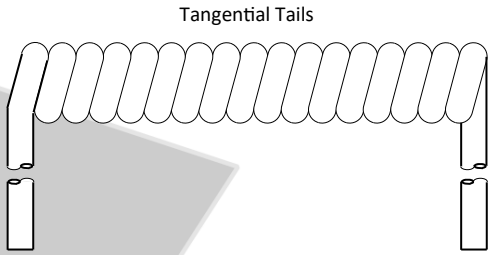


Signaline RC Retractable Cable is designed to withstand harsh environments, oil, grease and similar chemicals. They are not prone to flap in strong winds. The above specification will meet the requirements of most floating roof applications. For specialist applications please provide our sales office with your requirements.

**LICO Electronics GmbH**
Klederinger Strasse 31
A-2320 Kledering/Wien
Vienna - Austria

Tel: +43 1 706 43 000 Fax: +43 1 706 41 31
email: sales@lico.at

# Signaline Universal Connector Box

The Signaline Universal Connector Box (Signaline UCB) can be used as an end of line enclosure, junction box or an interposing line unit.

It is supplied with appropriately sized cable glands, terminal block and 470 and 680 ohm resistors. It is a quick and efficient method to interconnect, terminate and join lengths of any Signaline Heat Sensing Cable.

It can also be used for connecting the incoming leader cable to the

**Signaline UCB Specification**

| | |
|---|---|
| **IP Rating** | 66 |
| **Dimensions** | 94 x 94 x 57 mm |
| **Material** | Impact and flame resistant polycarbonate |
| **Lid Seals** | Non ageing polyurethane |
| **Colour options** | RAL 7035 Grey |
| **Chemical resistance** | Resistant to most acids, alkalis and oils |
| **Operating Temp** | -35°C to 120°C |

The Signaline UCB is suitable for use with these cables:

- Signaline FT-68
- Signaline FT-68-R
- Signaline FT-88
- Signaline FT-88-R
- Signaline FT-105
- Signaline FT-105-R
- Signaline HD

**Signaline UCB configurations**

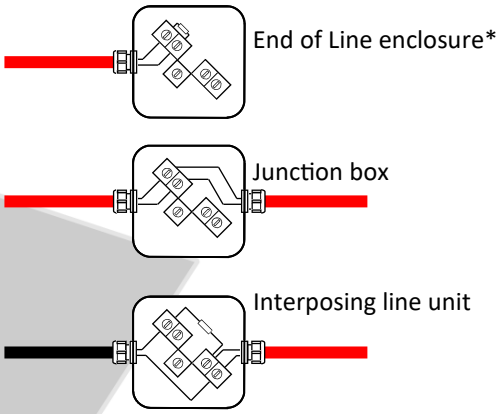


* The end of line monitoring component (such as resistor, capacitor or diode) is not included, this is normally supplied by the control panel manufac-

**LICO Electronics GmbH**
Klederinger Strasse 31
A-2320 Kledering/Wien
Vienna - Austria

Tel: +43 1 706 43 000 Fax: +43 1 706 41 31
email: sales@lico.at

# Signaline Ex Universal Connector Box

The Signaline Ex Universal Connector Box (Signaline Ex-UCB) can be used in hazardous areas as an end of line enclosure, junction box or an interposing line unit.

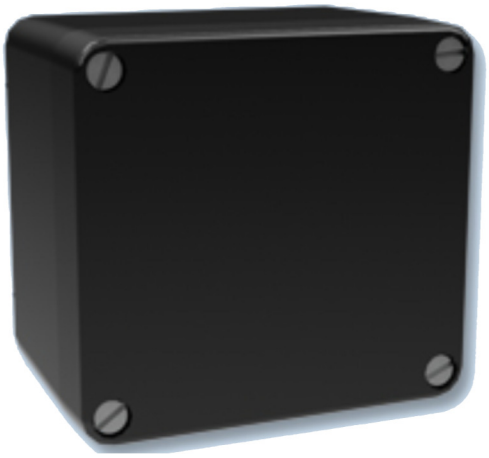

It is supplied with appropriately sized cable glands, terminal block and 470 and 680 ohm resistors. It is a quick and efficient method to interconnect, terminate and join lengths of any Signaline Heat Sensing Cable.

It can also be used for connecting the incoming leader cable to the

**Signaline Ex-UCB Specification**

| | |
|---|---|
| **Dimensions** | 70 x 80 x 55 mm |
| **Material** | Carbon loaded, anti-static UL 94/V0 Glass Rein- |
| **Lid Seals** | Silicone cord |
| **Colour options** | Natural Black |
| **Chemical resistance** | Resistant to most acids, alkalis and oils |
| **Approvals** | ATEX - SIRA99ATEX3200X |
| | IEx - ICExSIR06.0106 |
| **Marking** | II 2 GD |
| **Type of protection** | Ex e IIC T6 Gb Ta -40°C to +40°C |
| | Ex tb IIIC T80°C Db |
| | 2GD Ex e IIC T5 Gb Ta-40°C to +55°C |
| **Cable entry** | 2 x M20 threaded |
| **Cable glands** | 2 x brass glands for use with Signaline cables |
| **Terminals** | 1 x MK3, 5 way terminal block |
| **Cover fixings** | M6 stainless steel retained screws |
| **Weight** | 0.4 Kg |

**Signaline Ex-UCB configurations**

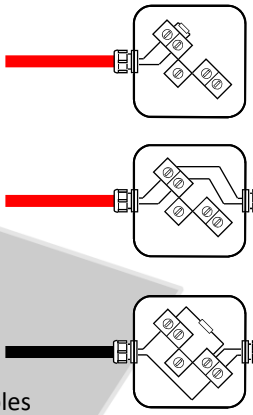

End of Line enclosure*

Junction box

Interposing line unit

* The end of line monitoring component (not included) is normally supplied by the control panel manufacturer. For hazardous areas only EOL resistors

**LICO Electronics GmbH**
Klederinger Strasse 31
A-2320 Kledering/Wien
Vienna - Austria

Tel: +43 1 706 43 000 Fax: +43 1 706 41 31
email: sales@lico.at

# P Clip and K Clip

**P Clip**

Zinc plated steel clip with a UV and ozone resistant cushion insulator. The fixing screw is not included.

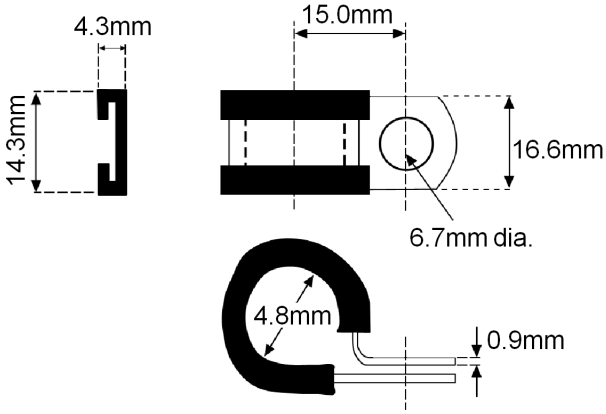


**K Clip**

The latest addition to our range of cable clips, the K clip, offers installers significant improvements over traditional fixing methods:

- 6mm dia. knock in spigot, simply drill and fix
- No wall plug and screw necessary resulting in reduced cost
- Reduced installation time, around 50% quicker than conventional methods
- The cable stands off the wall/ceiling by 4.5mm
- Designed specifically for Signaline HD Cables

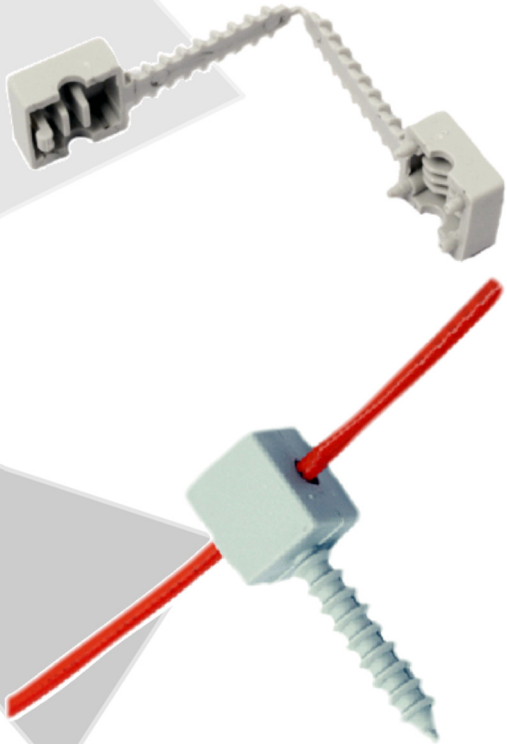

**LICO Electronics GmbH**
Klederinger Strasse 31
A-2320 Kledering/Wien
Vienna - Austria

Tel: +43 1 706 43 000 Fax: +43 1 706 41 31
email: sales@lico.at

# A Clip and T Clip

The ideal location for heat sensing cable is on the ceiling in a similar location to conventional point type heat detectors. This ensures that the cable is rapidly exposed to the plume of hot gases from any event that rise and spread across the ceiling. In general one clip should be used every metre however two clips should be mounted close together at 90 degrees where the cable route changes direction.

**A Clip**

Manufactured from nylon with M6 fixing holes complete with cable tie. Ideal for installation where heat transfer from the fixing point to the heat sensing cable must be minimised. The fixing screw is not included. Not suitable for outdoor use.

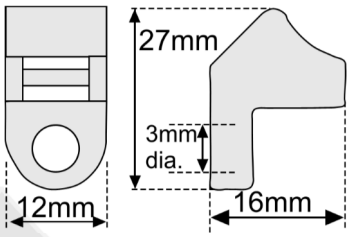

**T Clip**

A Polypropylene plastic moulding with a slot into which the heat sensing cable is located. For extra security a tie wrap may be used in a figure of 8 arrangement to prevent the cable from being pulled from the clip. The fixing screw and tie wrap are not included.

*Not suitable for HD-S cable

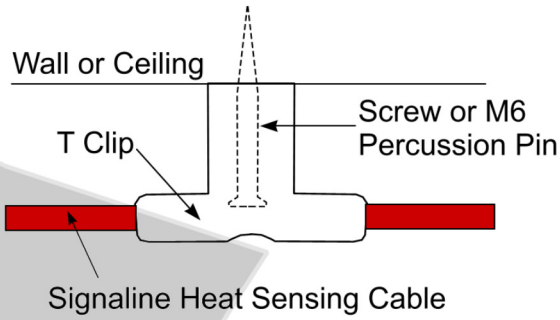

**LICO Electronics GmbH**
Klederinger Strasse 31
A-2320 Kledering/Wien
Vienna - Austria

Tel: +43 1 706 43 000 Fax: +43 1 706 41 31
email: sales@lico.at

# Edge Clip and J Clip

## Edge Clips

The knock on edge clip is designed for steel work of differing thickness. These fixings are available in mild steel with a zinc rich plated finish which has excellent resistance to corrosion and heat. The Heat Sensing Cable must be secured to the Edge Clip with the neoprene sleeve and tie wrap supplied

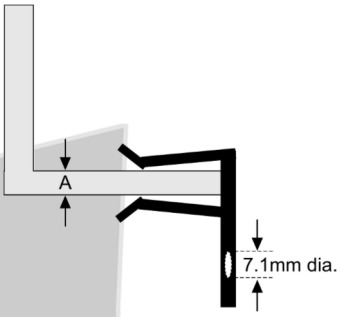


| PART No | A | Ø mm |
|---|---|---|
| FX/2H4 | 2-3mm | 7.1 |
| FX/4H24 | 3-8mm | 7.1 |
| FX/4H58 | 8-14mm | 7.1 |
| FX/4H912 | 14-20mm | 7.1 |

**J Clips**

The knock on J clips are suitable for the support of Signaline heat sensing cable from the outer edge of a conventional cable tray. The heat sensing cable must be secured to the J clip with the neoprene sleeve and tie wrap supplied

| PART No | A mm | MINIMUM RETURN mm |
|---|---|---|
| FX/J1 | 1.5 - 4 | 10 |
| FX/J2 | 4 – 6.5 | 10 |

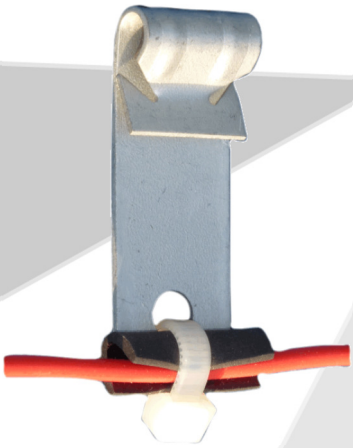

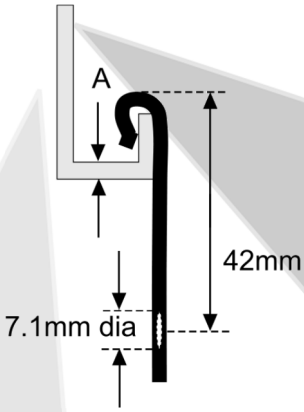


**LICO Electronics GmbH**
Klederinger Strasse 31
A-2320 Kledering/Wien
Vienna - Austria

Tel: +43 1 706 43 000 Fax: +43 1 706 41 31
email: sales@lico.at

# Beam Clamp and L Clip

## Beam Clamp Assembly

The beam clamp assembly is suitable for use when installing Signaline Heat Sensing Cables to metal work such as on floating roof tanks or cable tray applications. It compromises of a beam clamp, an L shaped extension bar and a P Clip.

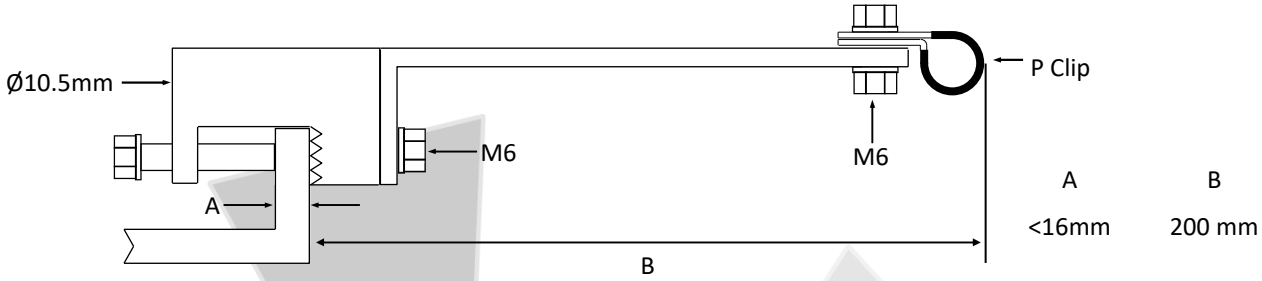


| A | B |
|---|---|
| <16mm | 200 mm |

## L Clip

The L Clip is an edge clip with extension arm. This arm will enable the installer to secure the Signaline cable directly over the protected area. Therefore making it ideal for cable trays and floating roof tank applications. The clip is made from a galvanised steel and comes complete with a P Clip.

Measurement A must be stated with order

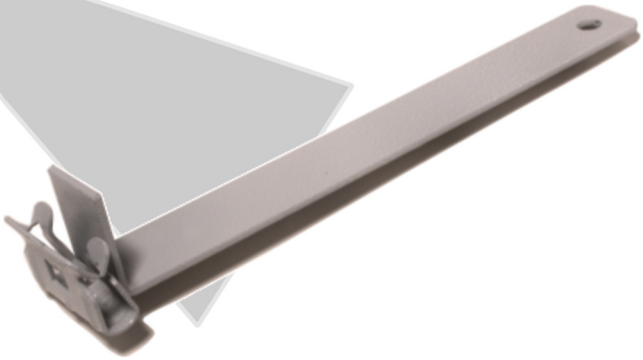

**LICO Electronics GmbH**
Klederinger Strasse 31
A-2320 Kledering/Wien
Vienna - Austria

Tel: +43 1 706 43 000 Fax: +43 1 706 41 31
email: sales@lico.at