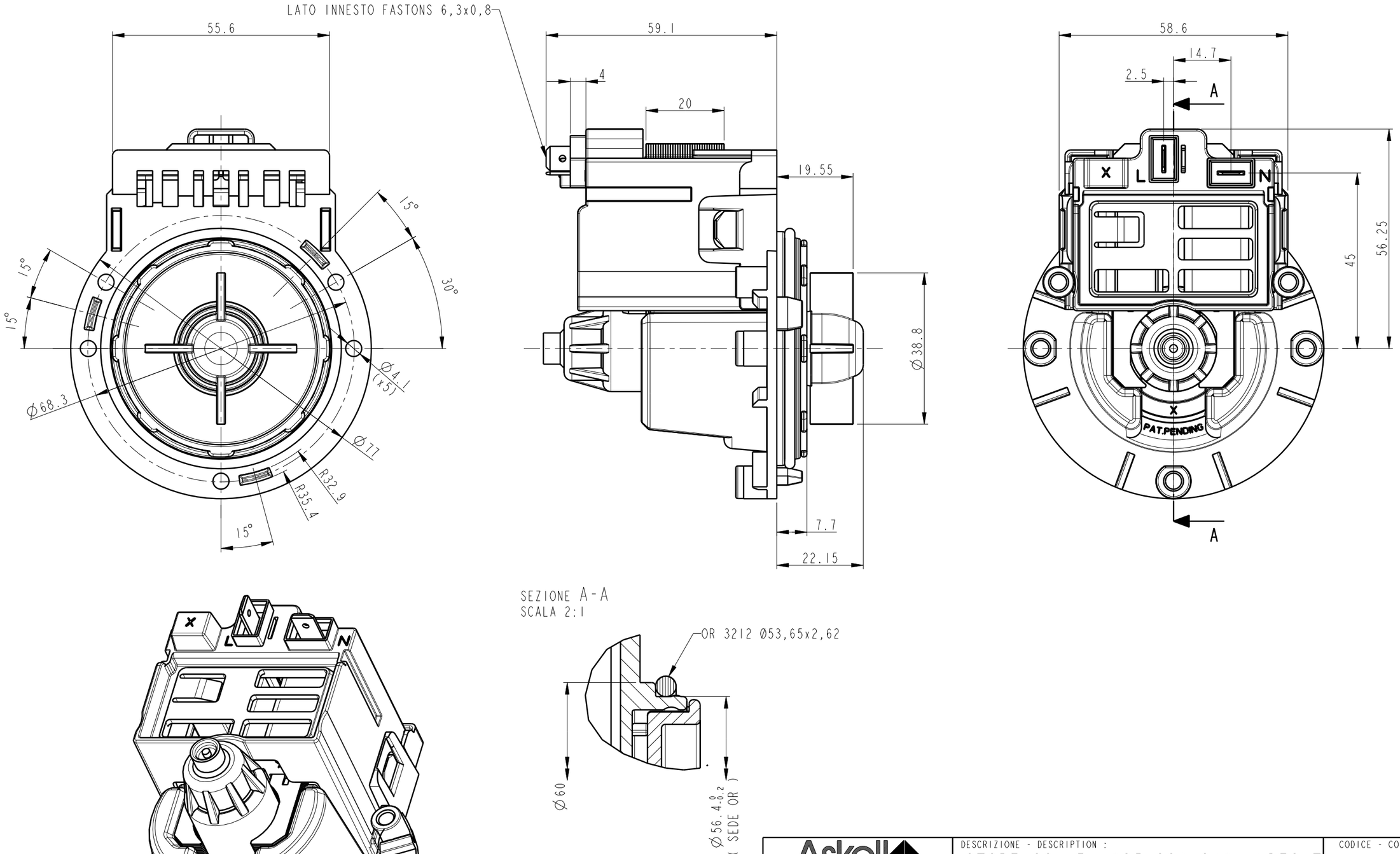

REV.	DIS.	DATA	NUM.	MODIFICA
00A	C.S.	22.02.2011	RN001801-W	Aggiornamento disegno.

Askoll Tre spa Via Industria, 11 36031 Dueville (VI) Italy

DESCRIZIONE - DESCRIPTION : MOTORE SC.LB 1925 220-240 INDESIT

CODICE - CODE : RN0018

REV. : 00A

STAMPO-TOOL COD.: -

MAT.1 :

MAT.2 :

COL.1 :

COL.2 :

TRATTAMENTO-TREATMENT:

STATO : Rilasciato

PESO-WEIGHT gr: -

TAVOLA-SHEET: -

PER TOLLERANZE NON INDICATE VEDI: TOL. UNLESS OTHERWISE INDICATED SEE: ISO 2768 - mK

ANGOLI: ANGLES: ISO 2768 - mK

SCALA-SCALE: 1:1

DISEGNATO - DRAWN : Simoni C.

CARATTERISTICA IN CONTROLLO: CONTROL CHARACTERISTIC:

CRITICA: CRITICAL: C

IMPORTANTE: IMPORTANT: I

CpK SPECIFICO: SPECIFIC CpK: X.XX

SECONDARIA - SECONDARY: NESSUNA EVIDENZIAZIONE NO EVIDENCE

NON INDICATA:VEDI FILE 3D OTHERWISE:SEE 3D FILE

DATA-DATE: 30/10/09

APPROVATO - APPROVED : S_approvato_da:d

THE PRODUCTS SUPPLIED BY ASKOLL ARE USED INTO HOUSEHOLD ELECTRICAL APPLIANCES. NONE OF SUCH PRODUCTS MUST RELEASE SUBSTANCES UNDER NORMAL OR REASONABLY FORESEEABLE CONDITIONS OF USE. THE COMPONENTS AND THE MATERIALS MUST NOT CONTAIN ANY HAZARDOUS SUBSTANCE IN COMPLIANCE WITH THE TERMS STATED IN THE DIRECTIVE 2002/95/EC (ROHS) AND IN THE REGULATION 1907/2006/EC (REACH), AND THESE SUBSTANCES MUST NOT BE ADDED TO ANY SUBSEQUENT PROCESS.

PDM VER: DRW: 2 PRT: 1

SOST.-SUBS.: RN001800

DEL-ON: 30/10/09

DISEGNO DI PROPRIETA' ASKOLL. SONO VIETATE A NORMA DI LEGGE LA RIPRODUZIONE O CESSIONE A TERZI NON AUTORIZZATE.
THIS DRAWING IS PROPERTY OF ASKOLL. IT MUST NOT BE COPIED, SHOWN OR OTHERWISE USED WITHOUT PERMISSION.

RIF. -REF.: -

DEL-ON: -

A3